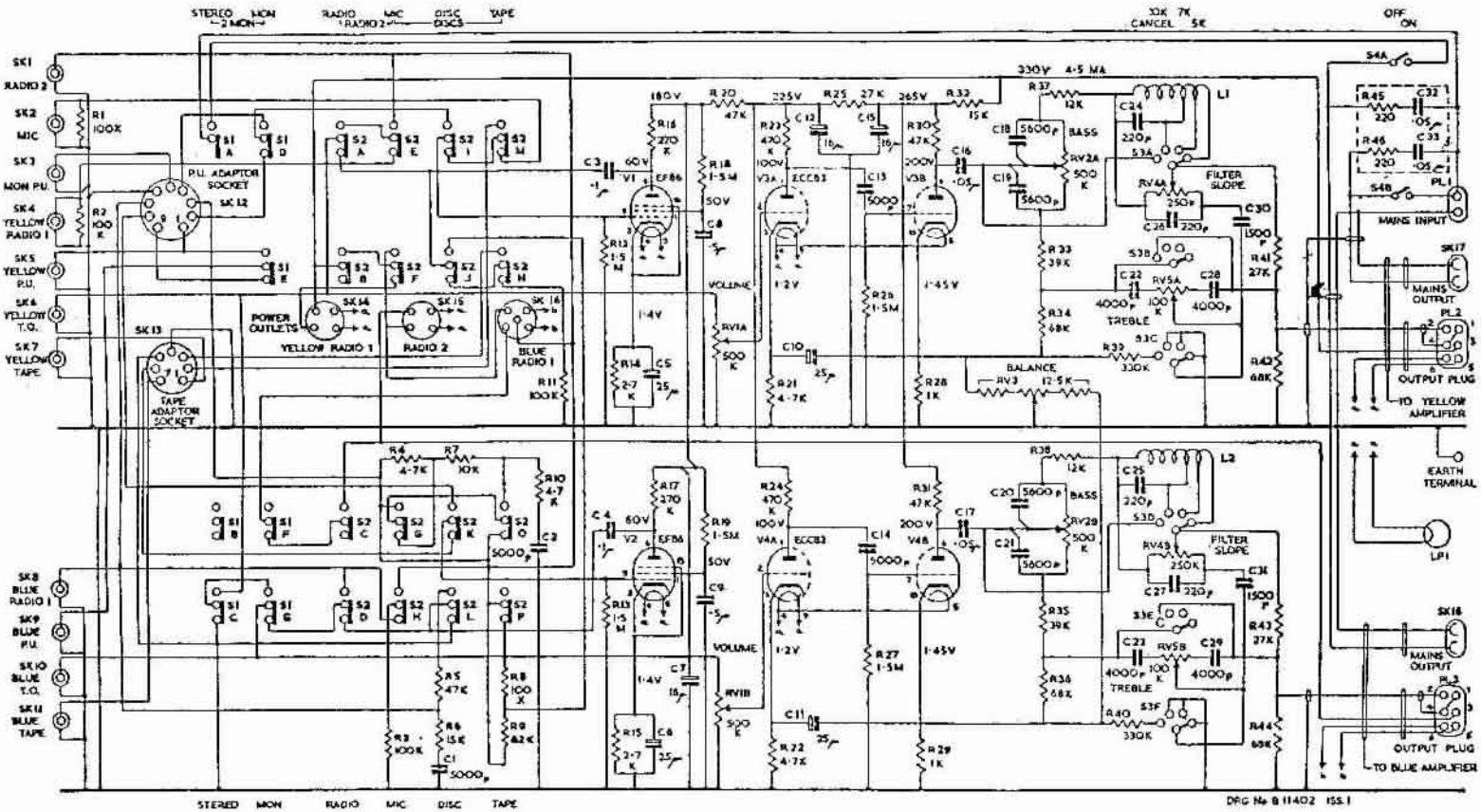
STEREO MON
2 MON
RADIO MIC DISC TAPE
RADIO 2
DISCS
30K 7K
CANCEL 5K
OFF
ON
SK1 RADIO 2
SK2 MIC
SK3 MON P.U.
SK4 YELLOW RADIO 1
SK5 YELLOW P.U.
SK6 YELLOW T.O.
SK7 YELLOW TAPE
SK8 BLUE RADIO 1
SK9 BLUE P.U.
SK10 BLUE T.O.
SK11 BLUE TAPE
P.U. ADAPTOR SOCKET
SK12
POWER OUTLETS
YELLOW RADIO 1
RADIO 2
BLUE RADIO 1
SK13
TAPE ADAPTOR SOCKET
330V 4·5 MA
180V
225V
265V
V1 EF86
V2 EF86
V3A ECC83
V3B
V4A ECC83
V4B
VOLUME
RV1A
RV1B
BASS
RV2A
RV2B
TREBLE
RV4A
RV4B
RV5A
RV5B
FILTER SLOPE
BALANCE
RV3
L1
L2
MAINS INPUT
MAINS OUTPUT
OUTPUT PLUG
TO YELLOW AMPLIFIER
TO BLUE AMPLIFIER
EARTH TERMINAL
LP1
PL1
PL2
PL3
SK17
SK18
S4A
S4B
DRG No B 11402 ISS.1